Experiences with large grid-forming inverters on various island and Microgrid projects

Presented by Oliver Schömann

Hybrid Power Systems Workshop, 05/2019, Crete

Disclaimer

- **IMPORTANT LEGAL NOTICE**

This presentation does not constitute or form part of, and should not be construed as, an offer or invitation to subscribe for, underwrite or otherwise acquire, any securities of SMA Solar Technology AG (the "Company") or any present or future subsidiary of the Company (together with the Company, the "SMA Group") nor should it or any part of it form the basis of, or be relied upon in connection with, any contract to purchase or subscribe for any securities in the Company or any member of the SMA Group or commitment whatsoever.

All information contained herein has been carefully prepared. Nevertheless, we do not guarantee its accuracy or completeness and nothing herein shall be construed to be a representation of such guarantee. The Company shall assume no liability for errors contained in this document, unless damages are caused intentionally or through gross negligence by the Company. Furthermore, the Company shall assume no liability for effects of activities that evolve from the basis of data and information provided by this presentation.

The information contained in this presentation is subject to amendment, revision and updating, which does not underlie any prior announcement by the Company. Certain statements contained in this presentation may be statements of future expectations and other forward-looking statements that are based on the management's current views and assumptions and involve known and unknown risks and uncertainties. Actual results, performance or events may differ materially from those in such statements as a result of, among others, factors, changing business or other market conditions and the prospects for growth anticipated by the management of the Company. These and other factors could adversely affect the outcome and financial effects of the plans and events described herein. The Company does not undertake any obligation to update or revise any forward-looking statements, whether as a result of new information, future events or otherwise.

You should not place undue reliance on forward-looking statements which speak only as of the date of this presentation.

This presentation is for information purposes only and may not be further distributed or passed on to any party which is not the addressee of this presentation solely after prior consent of the Company. No part of this presentation must be copied, reproduced or cited by the addressees hereof other than for the purpose for which it has been provided to the addressee. The content of

this presentation, meaning all texts, pictures and sounds, are protected by copyright. The contained information of the presentation is property of the Company.

This document is not an offer of securities for sale in the United States of America. Securities may not be offered or sold in the United States of America absent registration or an exemption from registration under the U.S. Securities Act of 1933 as amended.

Experiences grid-forming Inverters

1 **Background, technical basics**

Integration of VRE and grid-forming inverters

2 **Functionalities**

Basic grid-forming functionaliy and added features

3 **Project references**

St.Eustatius and other realized projects

4 **Learning and experiences**

Topics, challenges and measurement details

5 **Outlook**

Application and transfer to public grids

Integration of VRE in a Microgrid

Phases of VRE Intergration

- Higher shares requires more efforts for integration
- Possible measures to achieve the according share of solar integration in an isolated Microgrid

Phase	Measures to achieve stable operation
2	**Limit installations** Using existing flexibility No measures for operation
3	**Curtailment** Limits the injection to an allowable share by curtailment
4	**Storage** Reserve-power Must-Run units
5	**Grid-forming** Allows switching off all conventional Voltage-Sources 100% penetration allowed

Integration of grid-forming inverters

Required measures on Microgrid-level allowing 100% inverter-based operation

Design considerations

Protection and energization

Interface with existing generation (e.g Genset-Controllers)

monitoring and control

Energy Management

Deciding upon different operation modes

Managing and executing transfer of system states

Frequency and Voltage Control

Power dispatching

Secondary frequency and voltage Control

Experiences grid-forming Inverters

1 **Background, technical basics**

Integration of VRE and grid-forming inverters

2 **Functionalities**

Basic grid-forming functionaliy and added features

3 **Project references**

St.Eustatius and other realized projects

4 **Learning and experiences**

Topics, challenges and measurement details

5 **Outlook**

Application and transfer to public grids

Control Schematic

Grid-forming in SMA large scale storage inverters

P Reference:
(Active power at nominal frequency)

Active power/ frequency -droop

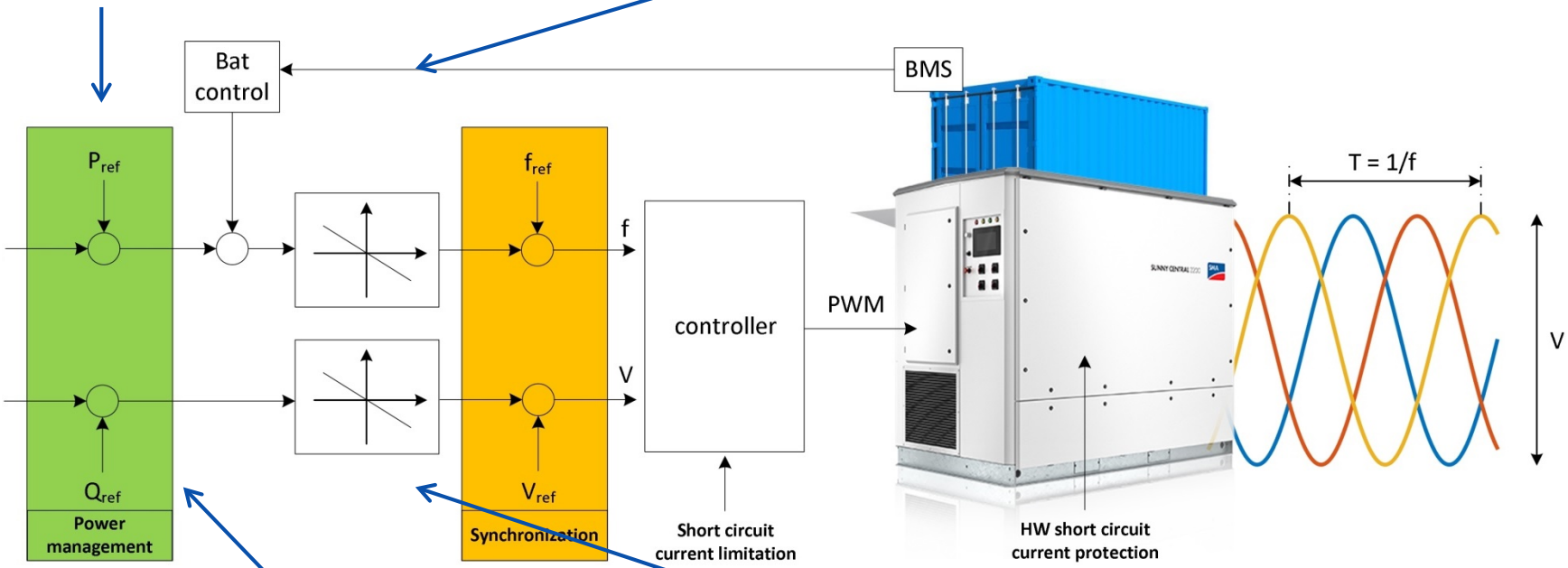

Q Reference:
(Reactive Power at nominal voltage)

Reactive power/ voltage- droop

Blackstart

- Topics of realization

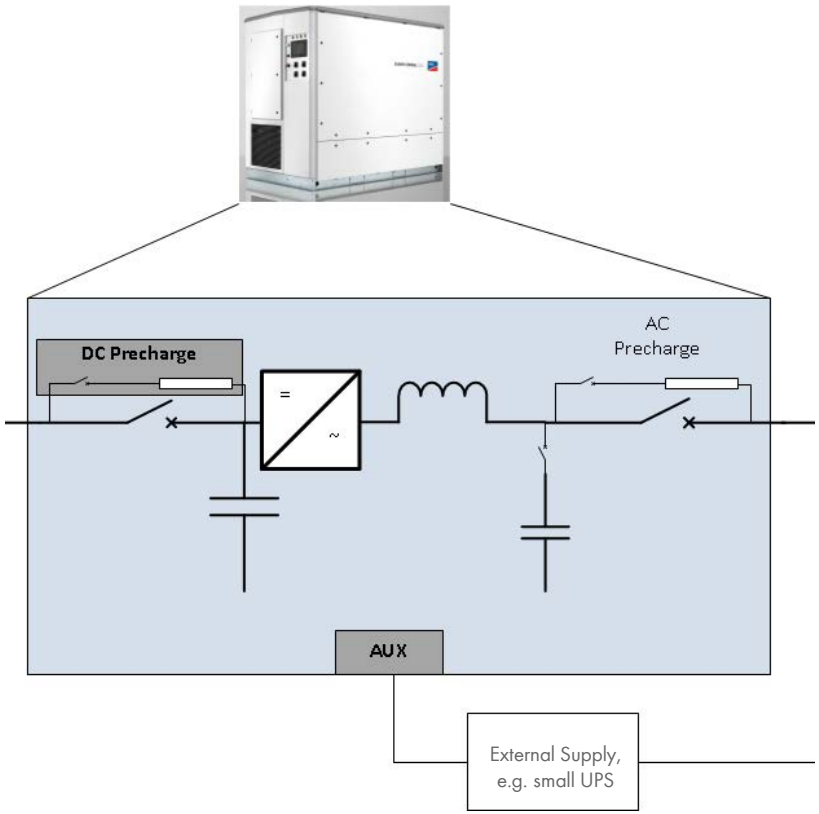

1

Benefits and motivation

Self-energization allows easier design

Additional service for grid-tied battery-plants

Resiliency for Back-Up-operation

2

On inverter-level

Internal precharge from DC-side

external Aux supply

3

On plant-level

Synching the start of several devices

Start-up of large transformer fleets

Integration into grid-infrastructure

Synchronization

- Topics of realization

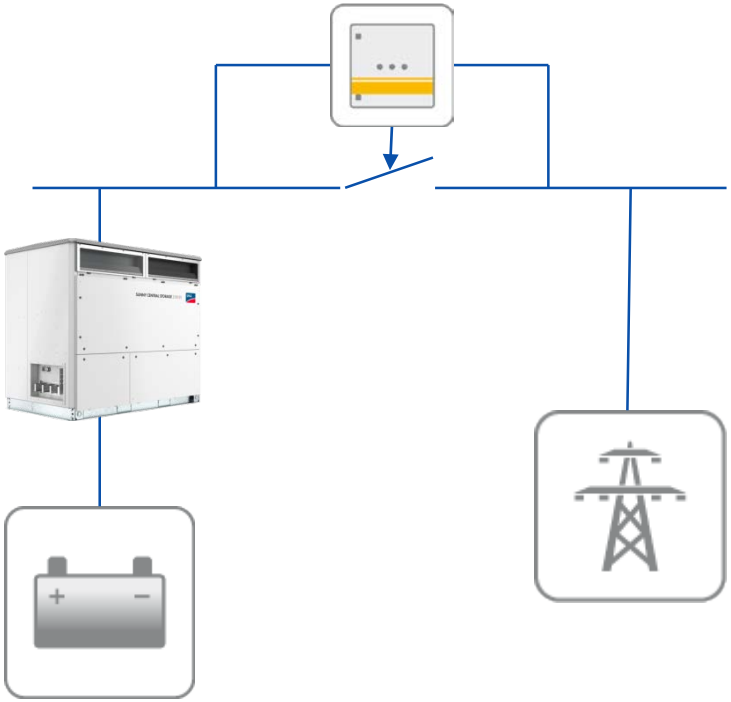

1

Benefits and Motivation

Flexibilty for Microgrid operation

Back-Up operation and seamless Re-Sync

Stacking of application and services

2

Measurements

Frequency, amplitude and phaseshift

Often remote-location of POI

3

Control and operation

Conditions for De-Sync and Re-Sync

Speed, precision and timing of synchronzisation

Experiences grid-forming Inverters

1 **Background, technical basics**
Integration of VRE and grid-forming inverters

2 **Functionalities**
Basic grid-forming functionaliy and added features

3 **Project references**
St.Eustatius and other realized projects

4 **Learning and experiences**
Topics, challenges and measurement details

5 **Outlook**
Application and transfer to public grids

Project St.Eustatius II, Caribbean Island

– operational since 11/2017, refer to SIW18_252

Intensive SAT

Fault-clearing
Online-UPS
Resiliency

Fed-In Energy

Total injected energy 6.49 GWh in the first year met design target of 6.4 GWh very well

Frequency and Voltage Control

An already installed synchronous condenser was decomissioned again because of high lossesand no noticable advantage

Immediate Backup

Within the first 6 months, in 7 events genset failures during night were compensated by the battery plant

Efficiency

Difference between power and energy application

Customer's Feedback

more reliable than the well-established diesel genset fleet

Project Integration done by SMA Sunbelt Energy GmbH

Project basics Saba, Caribbean Island

– operational since 02/2019

- Installation in two phases
- ~1 Mio l Fuel saving per year
- Up to 10 h per day no genset running

- 2.0 MWp Solar
- 2.3 MWh Battery capacity
- Hybrid Controller

- 4 MVA genset capacity
- ComApp genset-controller
- Load of ~1.2 MW

Project Integration done by SMA Sunbelt Energy GmbH

Project basics Graciosa, Azores, Portugal

– operational since end of 2018

- 3 Sunny Central Storage 2475
  - Blackstart included
- 6 MW Leclanché Li-Ion Battery

- Wind-farm 4,5 MWp
- 5*900kW Enercon

- 1MWp Solar-plant
- Existing genset-fleet

Project Integration done by Greensmith, a Wärtsilä Company

Project basics “The Brando”, Tetiaroa, French Polynesia

– operational since 12/2018

- Luxury Eco-Resort
- ~ 500.000l Fuel saving per year
- Up to 13h per day no genset running

- SCS 2200 Grid Forming
- Hybrid Controller
- Blackstart on plant-level included

- 1.4 MWp Solar, 32 STP Inverters
- CRE genset-controller
- Solar fraction of ~60%

Project Integration done by SMA Sunbelt Energy GmbH

Project basics Bordesholm, Germany

– operational since 04/2019

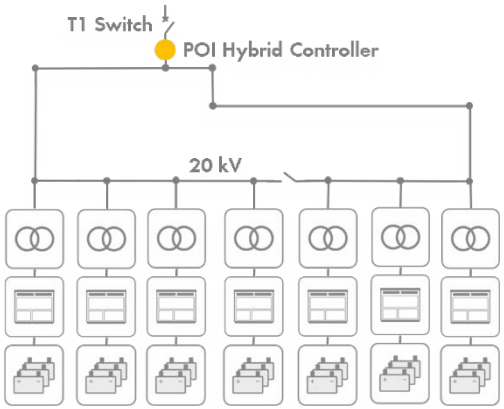

- Plant is mainly operating for Frequency Control Application (PRL)
- Can act as backbone for isolated grid operation of the local utility

- 7 Sunny Central Storage 2500-EV
- Hybrid Controller

- Island Operation, Blackstart and plant-resynchronization included
- Extended Site Acceptance Tests with TH Köln

Project Integration done by RES Germany GmbH for the local utility company Versorgungsbetriebe Bordesholm GmbH

Experiences grid-forming Inverters

1 **Background, technical basics**
Integration of VRE and grid-forming inverters

2 **Functionalities**
Basic grid-forming functionaliy and added features

3 **Project references**
St.Eustatius and other realized projects

4 **Learning and experiences**
Topics, challenges and measurement details

5 **Outlook**
Application and transfer to public grids

Blackstart of a small Microgrid
- Start with one Inverter

Softstart of the whole grid

- Ramp-Up of Voltage
- Transformers are connected
- Obviously some loads are also connected

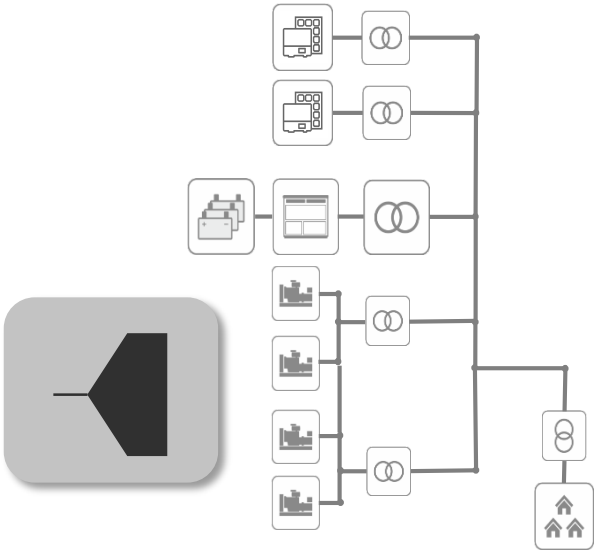

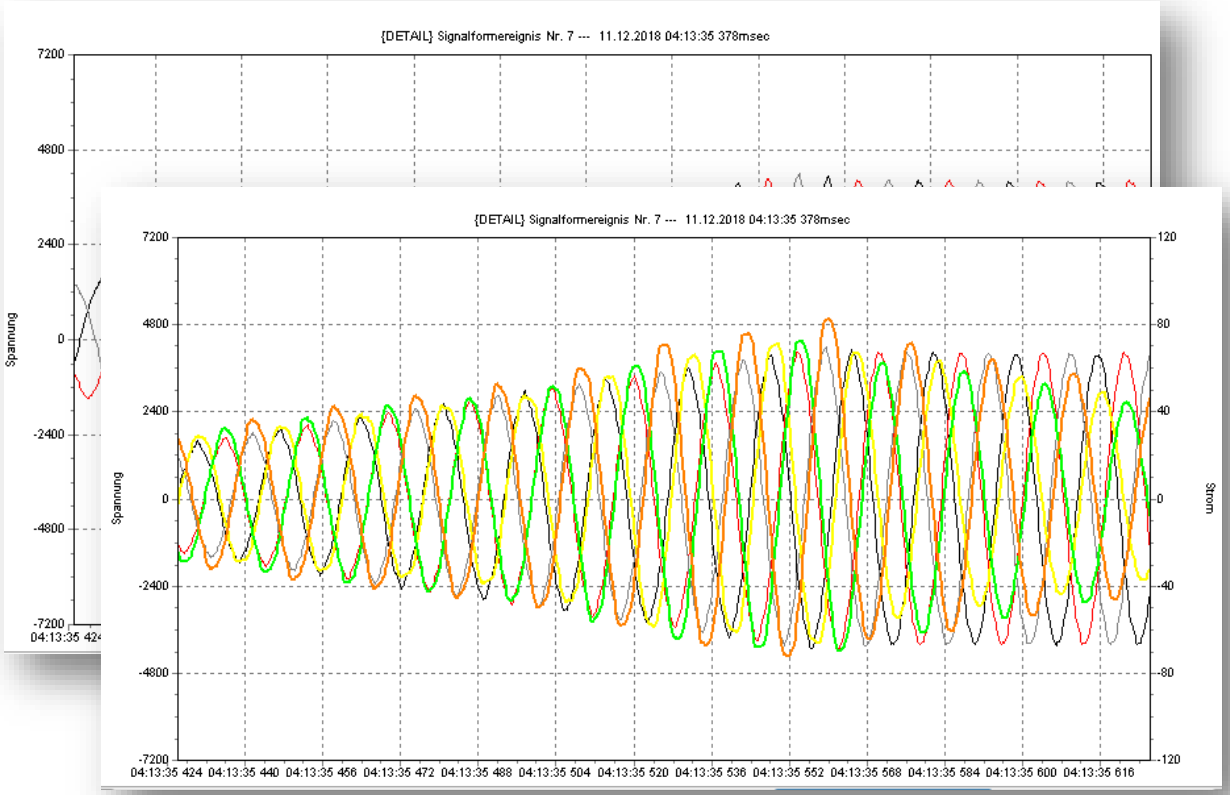

Logdata: Meas_302

Blackstart of a large Power Plant
- Start with several Inverters

Blackstart

- 20% Sync-voltage
- 2 devices used as Black-Start-Devices
- Simultaneously Ramp the Voltage up for 7 transformers

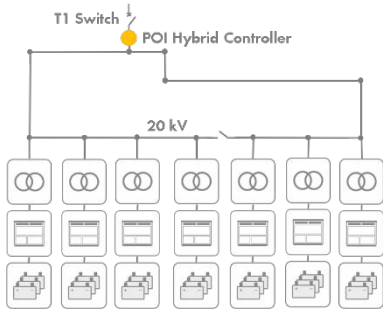

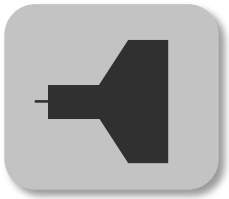

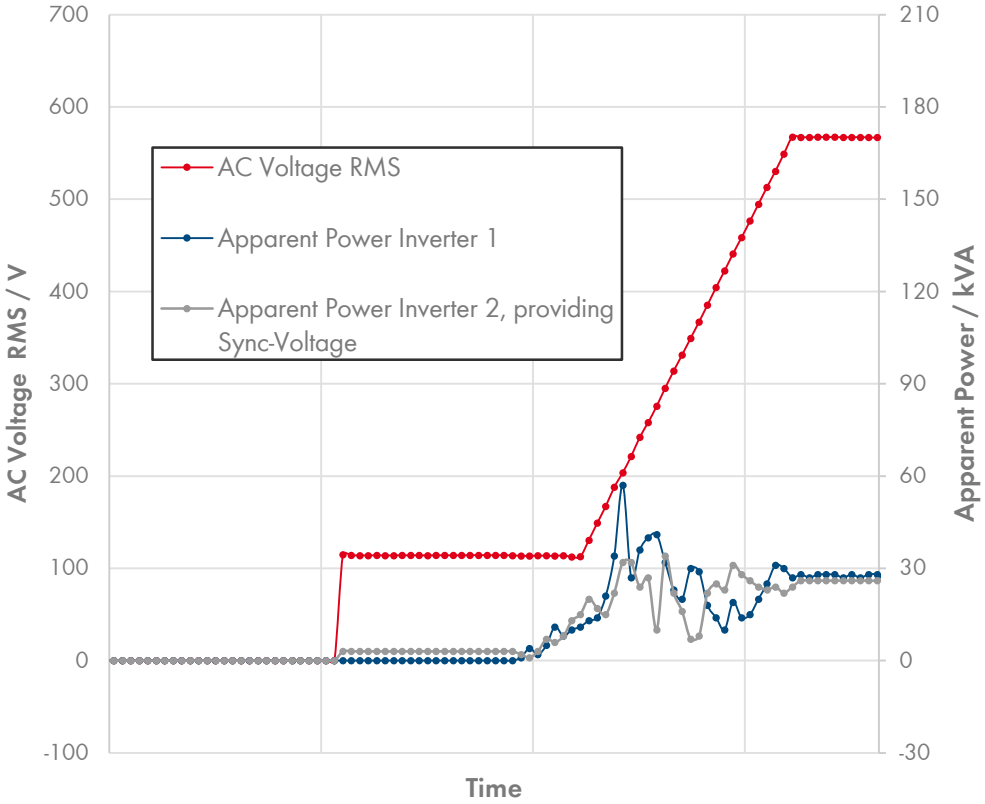

Low current required

Voltage Harmonics

Substantial Improvement

- Very high Harmonics in customer current consumption, especially 5th and 7th
- Typically 4-6% Uthd in Genset-based operation
  - Measurement on the MV-Bus
- Improvement by about 2% as soon as the SCS2200 is connected in Grid-Forming-Mode

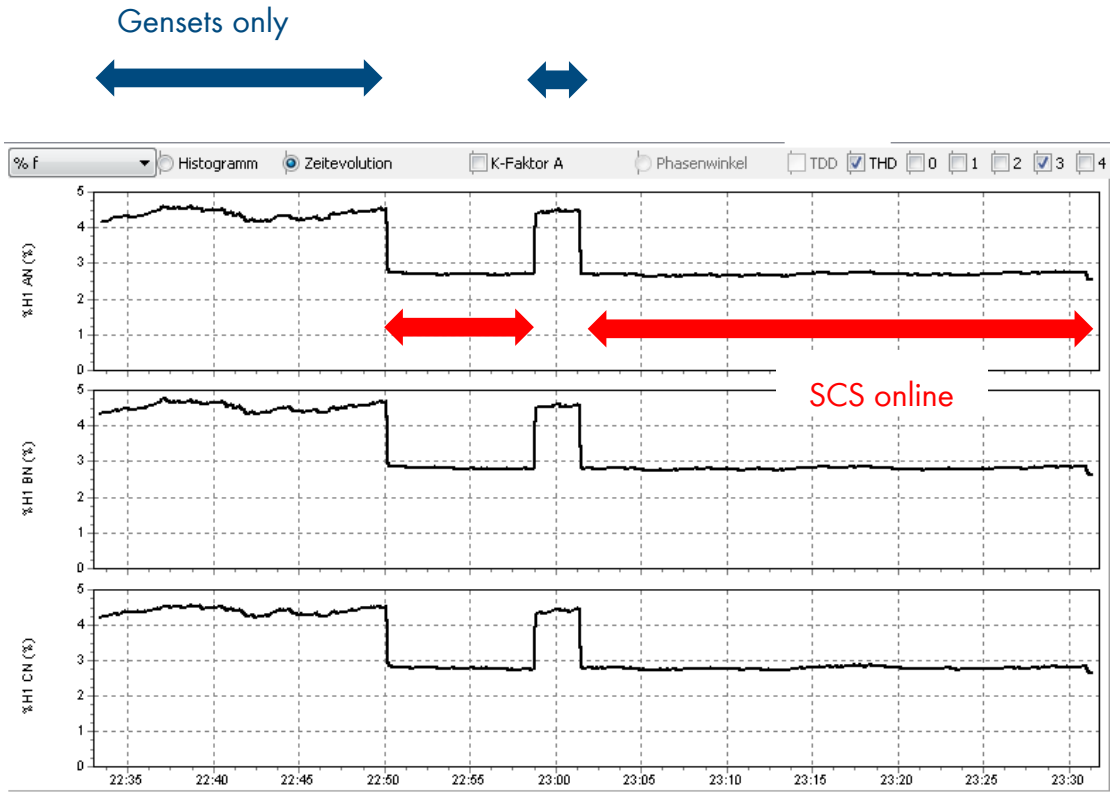

Logdata: Meas_297

Re- and Desynchronization

- Transfer Grid-tied ⇔ Island, Plant of Bordesholm

> Resyncing to the Grid, Desync, stop and Blackstart of the battery plant

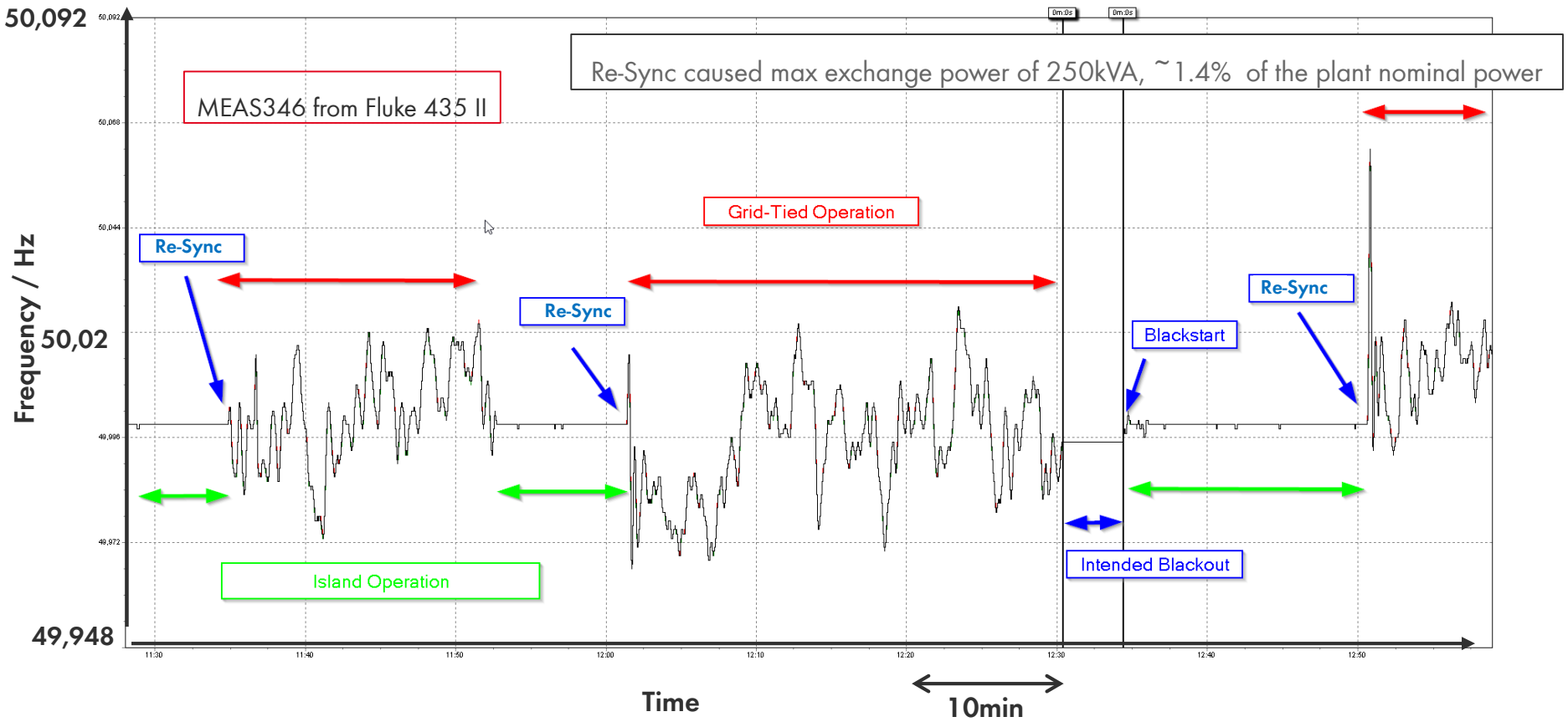

Side effects

- Switching the gensets off

Noise and exhaust fumes

Obvious and noticeable effect for all people next to the power plant

Maintenance

Less and more convenient maintenance w/o heat and noise of running engines

Consumption

Aux. Loads of Generator

- Fuel conditioning
- Pumps and fans

e.g. ~10% of total load

Changing a lot

Tasks of operators change a lot

Fully automated operation

New interfaces to deal with

Experiences grid-forming Inverters

1 **Background, technical basics**

Integration of VRE and grid-forming inverters

2 **Functionalities**

Basic grid-forming functionaliy and added features

3 **Project references**

St.Eustatius and other realized projects

4 **Learning and experiences**

Topics, challenges and measurement details

5 **Outlook**

Application and transfer to public grids

Outlook
- Application in public grids

Control stability and reserve power

Paving the way to higher VRE penetrations

Automatic frequency stabilization

Resiliency

Battery plant can act as a backbone for a local Microgrid

Blackstart allow operation according to a cellular approach

Fault-Ride-Through

Robust ride-through
Fast and suitable current limitation
Requirement specification to be done

Grid Codes

Grid-Codes are usually designed for current-controlled inverters

Review of requirements regarding the inherent behaviour and favorable application of grid-forming control

Summary

- Grid-forming experiences in Hybrid Power Systems

Still new but proven

field experience and intensive testing in a lot of different projects realized and succesfully operating

Parallel operation with units reaching from 125kVA gensets to public grid

Design and integration are crucial

Project engineering is a huge topic for 100% Inverter-based operation

100% VRE are possible

No „must-run" conventional power plants required

Topics for Grid-tied use

Grid-Codes are usually designed for current-controlled inverters

Thank you very much for your attention!

ENERGY
THAT
CHANGES

SMA

Oliver Schömann
oliver.schoemann@sma.de

Project: Netzregelung 2.0, funding code:0350023D

Gefördert von

Bundesministerium für Bildung und Forschung

Bundesministerium für Wirtschaft und Energie

aufgrund eines Beschlusses des Deutschen Bundestages

SOCIAL MEDIA
www.SMA.de/Newsroom