Improving the integration of Renewables with Energy Storage in Islands

ABB’s experience in Island Grids

Agenda

ABB's experience in Micro - and Hybrid Grids (co-locating Renewables and Energy Storage)

1. ABB's leading position in Island Hybrid grids and related offerings
2. Lessons learned: Island Hybrid Business Case
3. Hybrid and Island Reference Projects
4. ABB Solutions: e-mesh Monitoring + Control solutions

Global experience

Microgrids and BESS

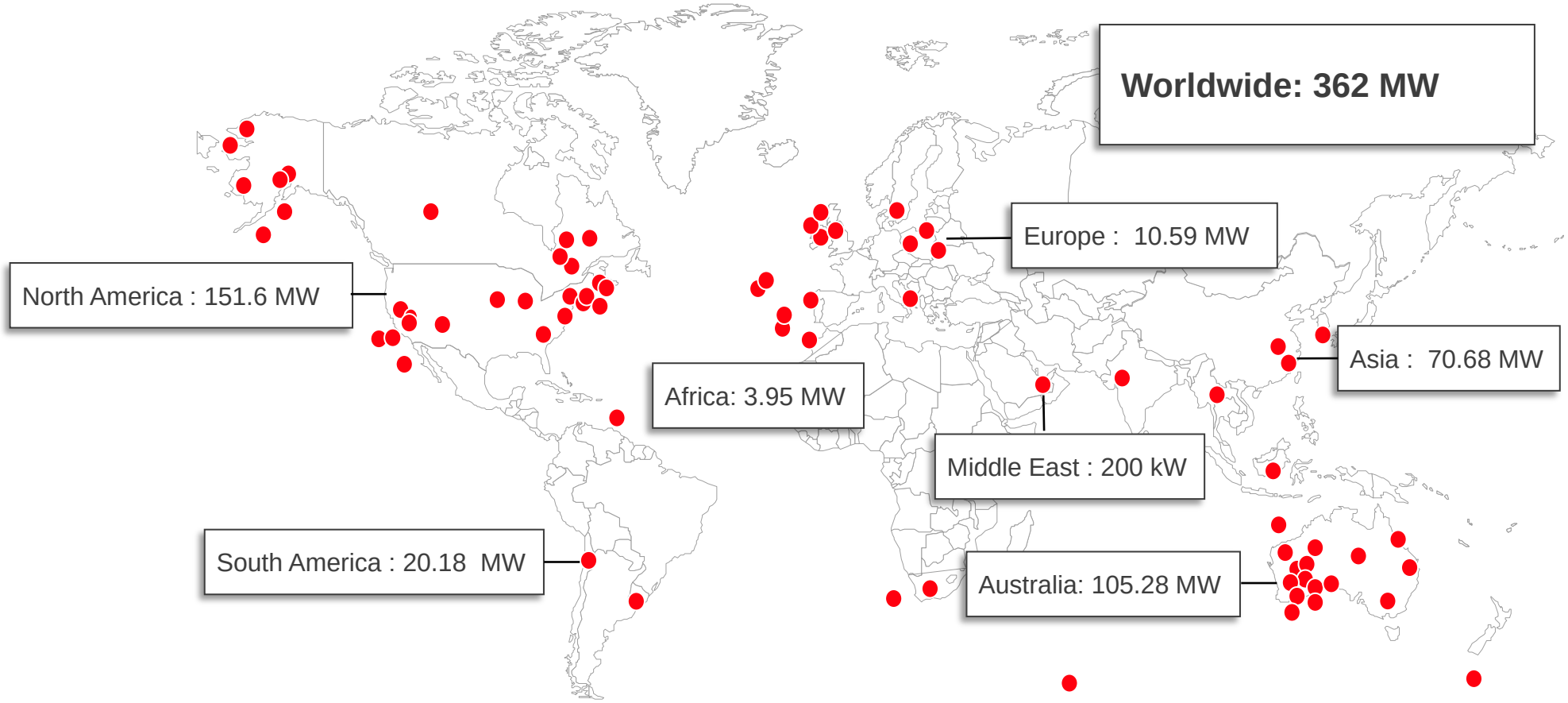

Hybrid or Island Microgrid

Access to power in remote locations, power quality plus lower cost and environmental impact

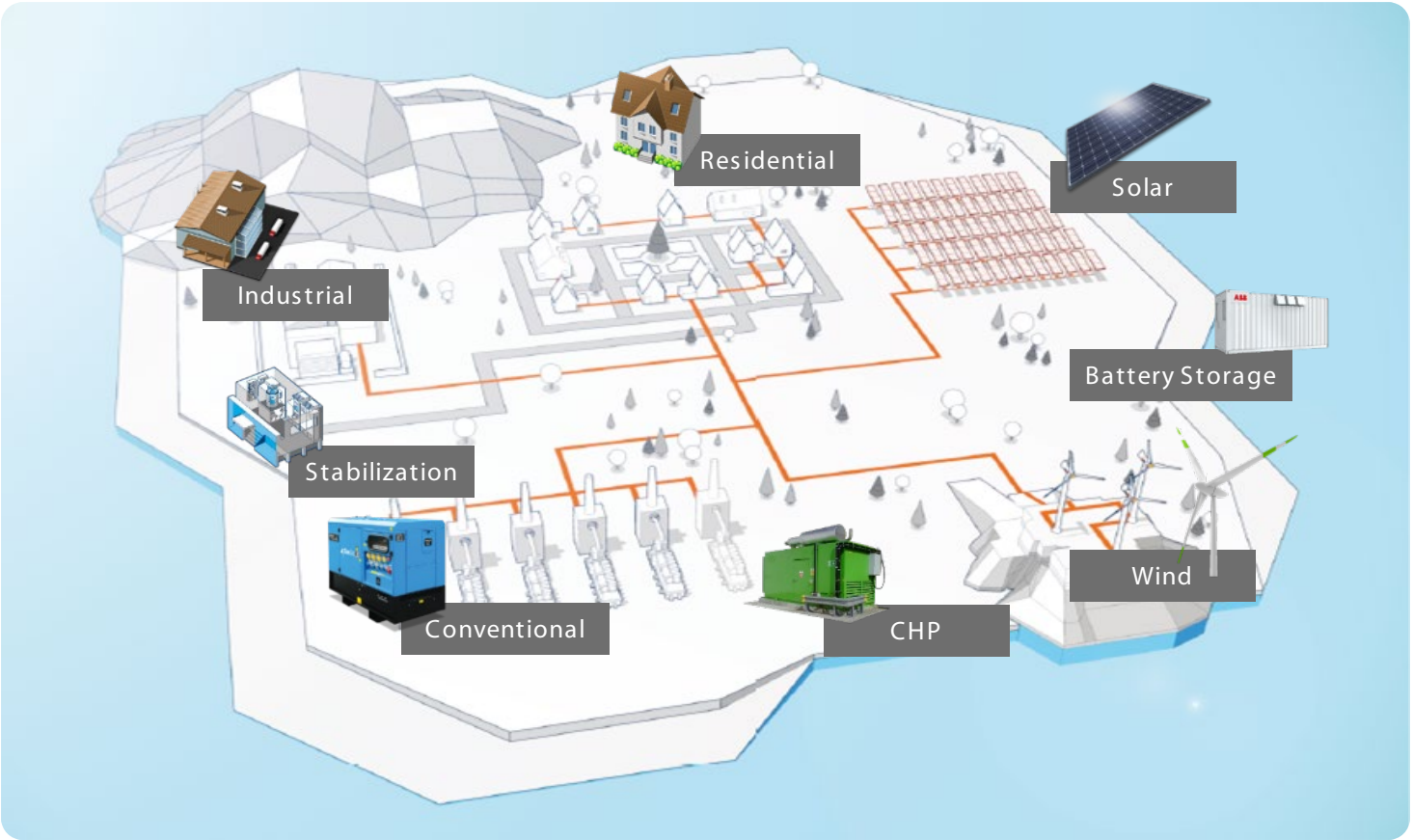

CHP: Combined Heat and Power

Case Study of microgrid technologies in an island utility

Goals, approach, and results

Goals

- **Affordable** : Reduce generation costs and risks due to volatile fuel prices
- **Stronger** : Strengthen grid to support local industry and renewables
- **Renewable** : Island goal for >30% renewable energy usage

Approach

We explore four incremental scenarios to meet these goals:

- 0 **Base case**: Diesel-only
- RR **Renewable ready**: Battery Energy Storage System (BESS) and Diesel
- M **Moderate Renewable**: Moderate solar PV with BESS and Diesel
- H **High Renewable**: Lots of solar PV with BESS and Diesel

Results

Explore what we can achieve and how we can get there

An integrated hybrid approach in islands

Incremental hybridization for lower costs, stronger grids, and increased renewable usage

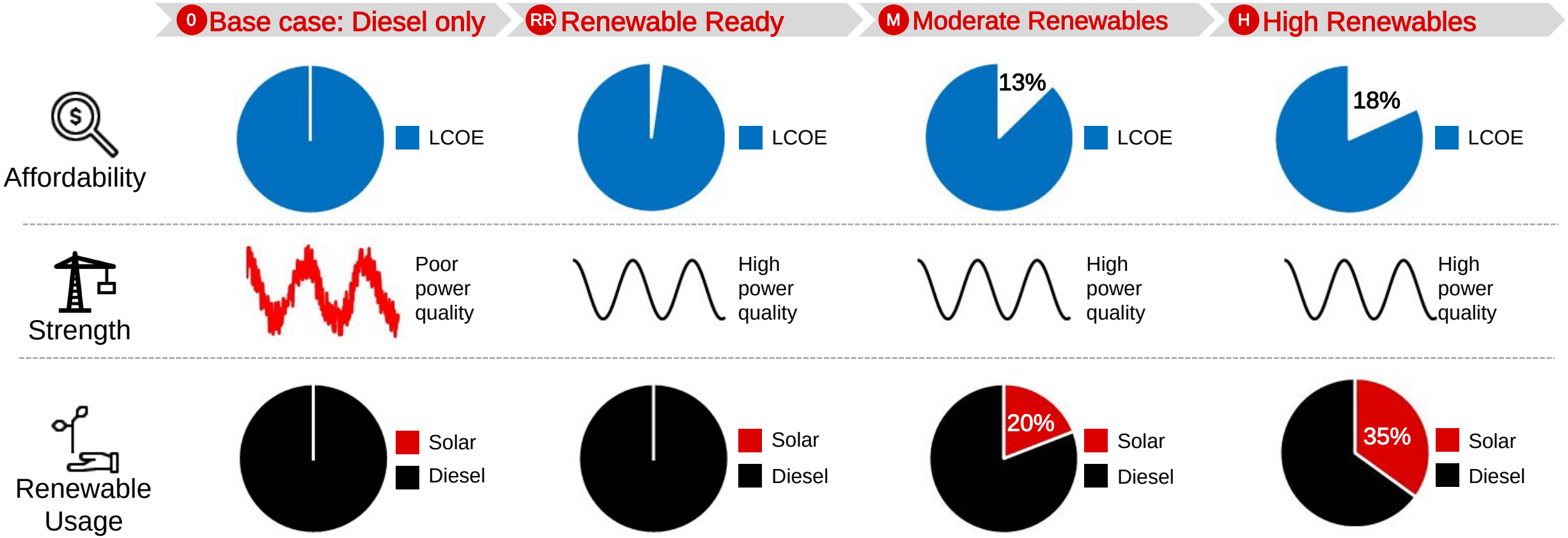

LCOE: Levelized Cost of Electricity

Why an integrated approach?

Smart controls and storage are necessary to maximize the benefits of renewable energy

Challenges for renewables in islands

- **Scale**: a “small” amount of renewable generation can cause transient issues
- **Power quality:** Renewables can exacerbate voltage and frequency issues in weaker grids
- **Dynamic loads** : Challenging for island grids to stabilize renewables (and large, dynamic industrial loads)
- **Limits** : without smart controls and storage, renewables must be limited to prevent power quality problems

Smart controls and storage

Enable island to get more than 4% of energy from solar 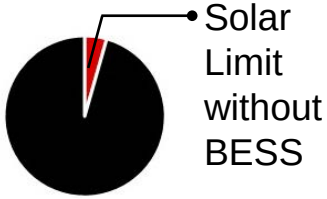	Mitigate power quality and reliability problems 

Smart controls and storage are necessary to meet island renewable energy goals.

An integrated hybrid approach in islands

Smart controls enable an incremental pathway to affordable, strong, renewable electricity

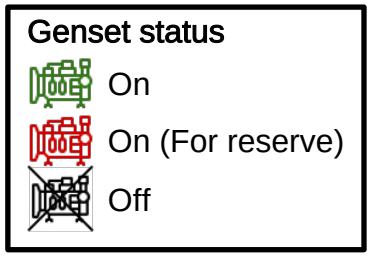

0 Base case: Diesel only

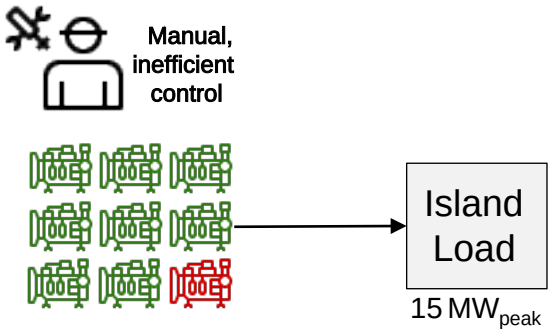

- 9 generator system is manually switched on and off
- 1 generator equivalent required as operating reserve at all times
- Generators share load
- Grid unable to accept significant amounts of renewables

RR Renewable Ready

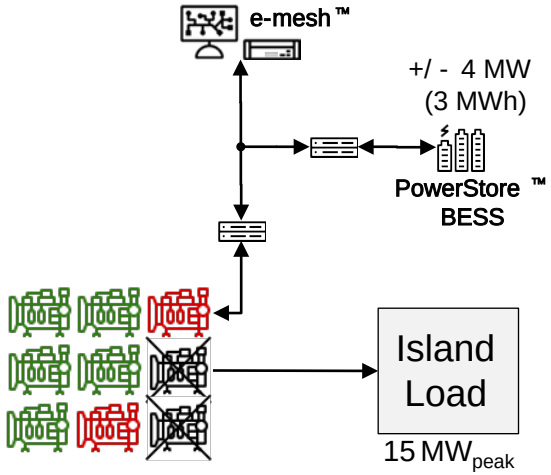

- BESS supplies reserve so two generators can turn off
- Controls remove need to start up a generator during short term peaks
- BESS improves power quality and reliability
- Grid is ready for renewables

M Moderate Renewables

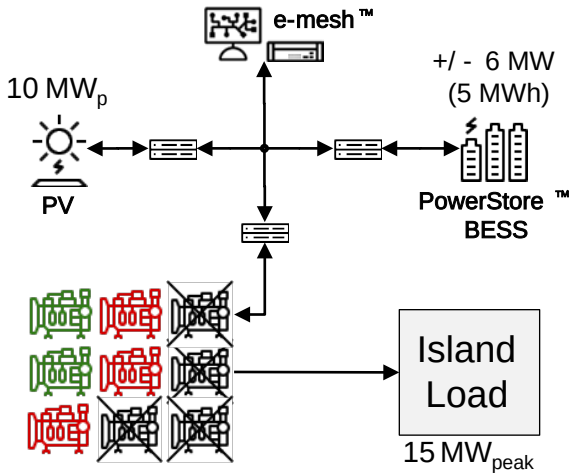

- BESS provides sufficient reserve to turn off more generators
- BESS allows PV capacity to exceed transient and generator step loading limitations
- Controls maximize fuel savings and reduce generator hours

H High Renewables

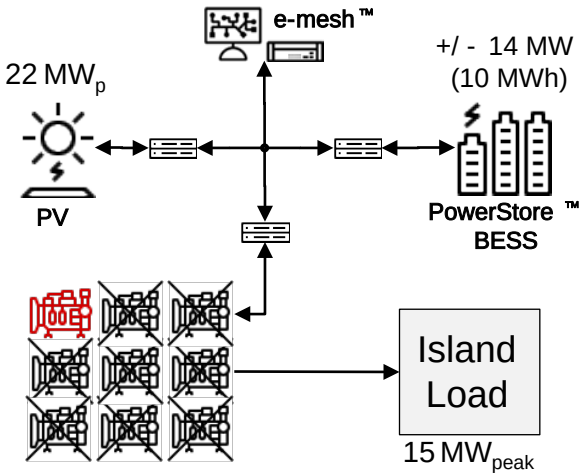

- BESS provides required reserve
- During sunny daylight hours all generators could be shut down

The High Renewable scenario yields greatest savings

Payback for all three hybrid systems is less than 6 years

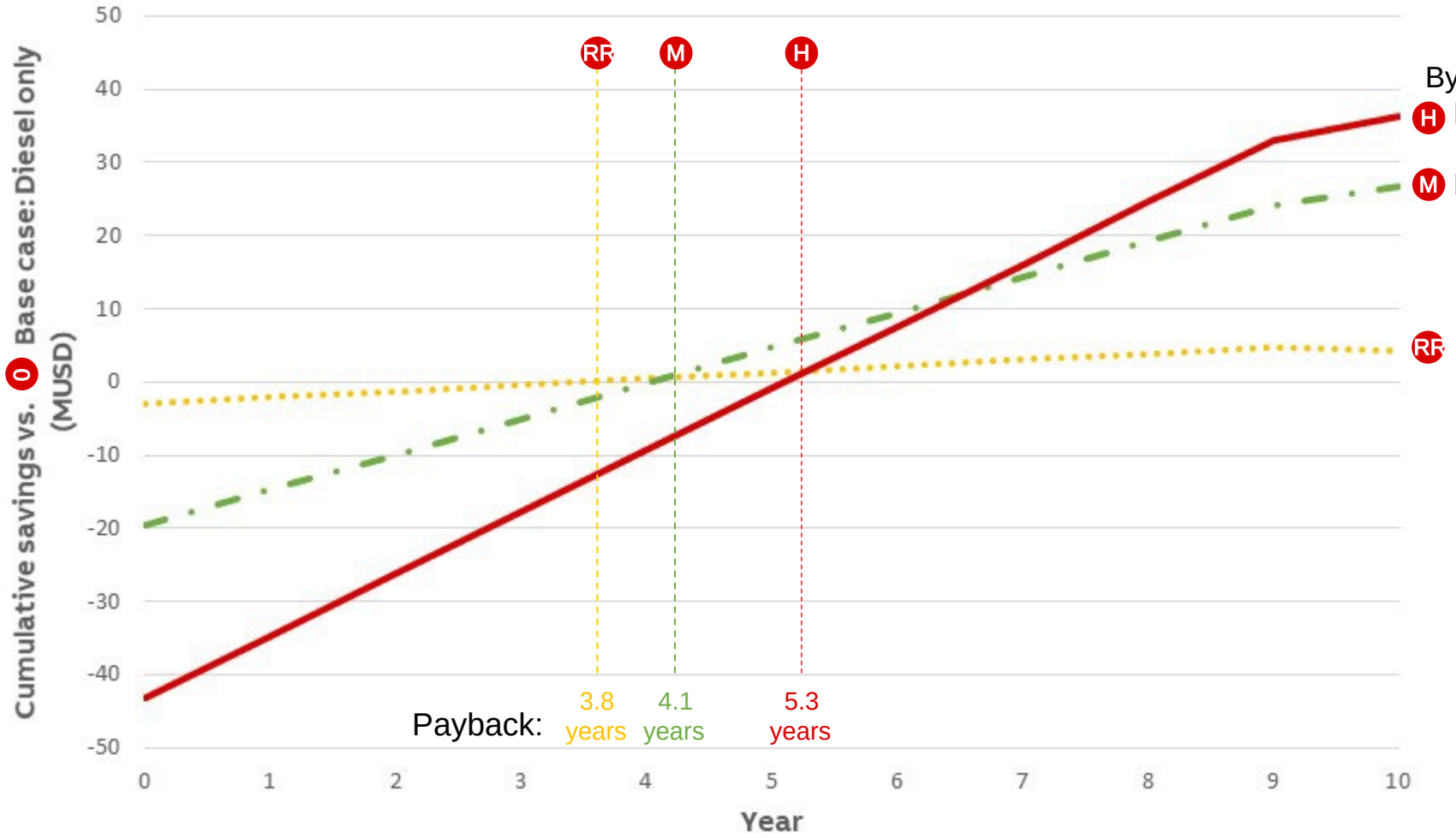

By year 10:

- H High Renewable scenario saves USD 36Mill
- M Medium Renewable scenario saves USD 27Mill

…and savings continue to grow.

Battery Energy Storage Solution

Chitose Hokkaido

About the Project

- **Project name:** Chitose Hokkaido, Li-ion batteries
- **Location:** Japan
- **Customer:** Japan's Energy Products Corporation and Korea Electric Power Corporation
- **Completion date:** 2016

Solution

ABB's scope includes:

- 17 MW outdoor PCS
- PCS inverters, DC contactors, AC circuit breakers
- MV-LV coupling transformer
- MV switchgear
- Local controller integrating PCS, switchgear and MBMS
- Local HMI

Customer Benefits

- Enabling Shin Chitose Solar plant to adhere to the grid code requirements of local utilities
- Ensuring reliable integration of renewables into the main power grid
- Helping Shin Chitose plant to generate power to 11,000 local households

Press Release

Enabling Japan's significant renewable initiative to generate 35 gigawatt-hours (GWh) of power for 11,000 local households

Island utilities

Jamaica Public Service (JPS), Wind/PV

About the Project

- **Project name:** JPS Grid Stability
- **Location:** Jamaica
- **Customer:** Jamaica Public Services Company Ltd
- **Year:** 2018

Solution

The resulting Microgrid system consists of:

- PowerStore Battery (21.5 MW / 16.6 MWh)
- PowerStore Flywheel ((3 x 1) MW / 16.5 MWs)

Customer Benefits

- Maximum utilization of solar and wind energy (160 MW or 25% of total consumption)
- Reliable power to 5 million populace in the island
- Power availability during intermittency of renewable sources
- Reduced dependency on fossil fuels and lower carbon footprint

Press Release

Island utilities

Robben Island, PowerStore/ PV/ Diesel

About the Project

- **Project name:** Robben Island
- **Location:** South Africa
- **Customer:** Department of Tourism, South Africa
- **Completion date:** 2017

Solution

The resulting Microgrid system consists of:

- PowerStore Battery (500 kW/ 837 kWh)
- Microgrid Plus Control System
- Wireless private network communication solution for connecting island plant w mainland control center
- Solar PV (667 kW_p)
- Diesel (1 x 500 kW)

Customer Benefits

- Lower fuel costs and carbon emissions by 75 %
- Enabling the island to run on solar power for at least 9 months of the year
- Remote monitoring of the entire system from Cape Town
- Remote set-up eliminates the need to maintain a workforce on the island

tourism
Department: Tourism
REPUBLIC OF SOUTH AFRICA

SOLA
FUTURE ENERGY

Web Story
Video

ABB's microgrid solution enables the Robben Island to run on solar power for at least 9 months in a year

ABB in Microgrid

Electrical balance of plant

Plant electrification, automation, power distribution and protection

Comprehensive scope of plant electrification and automation systems

- Solar inverters
- Plant automation, optimization and control and remote monitoring
- Control systems, drives, instrumentation, power converters and inverters

Low and medium voltage products and solutions for protection, control and measurement meeting the demands from all types of power distribution grids.

- Switchgears
- Transformers
- Circuit Breakers
- Substations
- Protection and control
- Measurement and monitoring

ABB in Microgrid

Grid stabilization and energy storage

PowerStore

Containerized plug-and-play solution in various ratings

Fully productized and scalable to address all market segment applications.

- Seamless transition from grid connected to islanded mode
- Stabilizes against voltage and frequency variations
- “Virtual Generator” can form the grid, integrating up to 100% of renewable energy
- Microgrid Plus Controller
  - Maximizes fossil fuel savings and optimizes use of renewable energy
  - Guarantees optimum loading and spinning reserve in fossil fuel generators
  - Distributed logic enhances reliability and scalability for future system expansions

Outlook: ABB Ability™ e -mesh™

Product Portfolio from assets in the field to monitoring + controls in the operations center

e-mesh™ Applications

SaaS applications to improve performance

- Forecast production and optimal planning
- Improve productivity and economical gains
- Business KPI dashboards and reports

e-mesh™ Monitor

Cloud-enabled remote monitoring and controlling of DERs

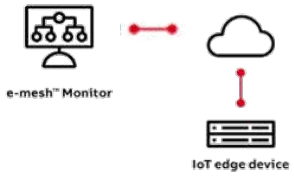

- Monitoring and control
- Bidirectional data flow from (and) or to the field
- Access from anywhere anytime

e-mesh™ SCADA

Distributed energy resources automation solution

- Data acquisition from DER's and substations
- Supports international and local communication protocols
- Interaction with TSO/DSO

e-mesh™ Control

Intelligent and efficient power management

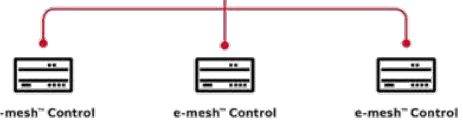

- Renewable power generation grid code compliance
- Network voltage control
- Feeder & Load demand management

e-mesh™ PowerStore™

Smart battery energy storage solution

- Supports various applications such as islanding, seamless transition, black start, spinning reserve and more

ABB